DIMENSIONING AND TOLERANCES

1. DIMENSIONING

Once the shape of a part is defined with an orthographic drawing, the size information is added in the form of dimensions. Dimensioning a drawing also identifies the tolerance (or accuracy) required for each dimension. If a part is dimensioned properly, then the intent of the designer is clear to both the person making the part and the inspector checking the part. Everyone in this *circle of information* (design, manufacturing, quality control) must be able to speak and understand a common language. A well-dimensioned part is a component of this communications process,

2. SIZE AND LOCATION DIMENSIONS

A well-dimensioned part or structure will *communicate* the size and location requirements for each feature. *Communications* is The fundamental purpose of dimensions.

Designs are dimensioned based on two criteria:
1. Basic sizes and locations of features.
2. Derails for construction and for manufacturing.

2.1 Units of Measure

The unit of measurement selected should be in accordance with the policy of the user. Construction and architecture drawings use feet and inches for dimensioning units. Most countries use the metric system of measure, or the international system of units (SI), which is based on the meter. The common metric unit of measure on engineering drawings is the *millimeter*, abbreviated as *mm.* Angular dimensions are shown either in decimal degrees or in degrees, minutes, and seconds. The symbol used for degrees is °, for minutes ', and for seconds ". Where only minutes and seconds are specified, the number of minutes or seconds are preceded by the 0°. Figure1 shows examples of angular units used to dimension angles.

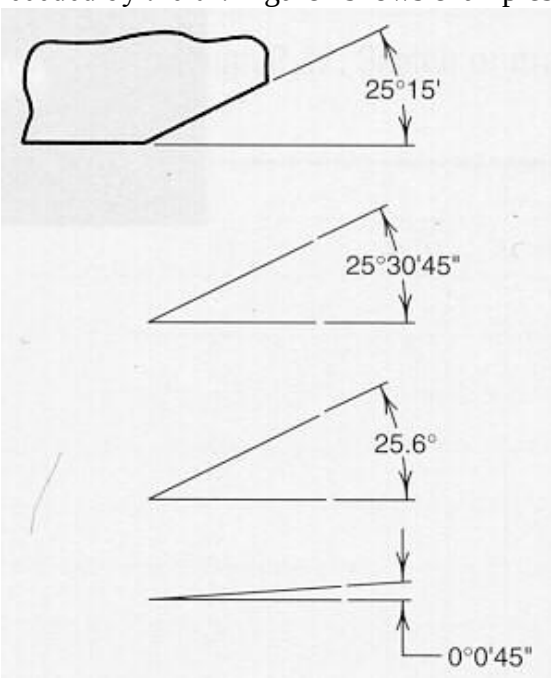

2.2. Terminology

There are a number of terms important to dimensioning practices. These terms are illustrated in Figure 2 and are defined as follows:

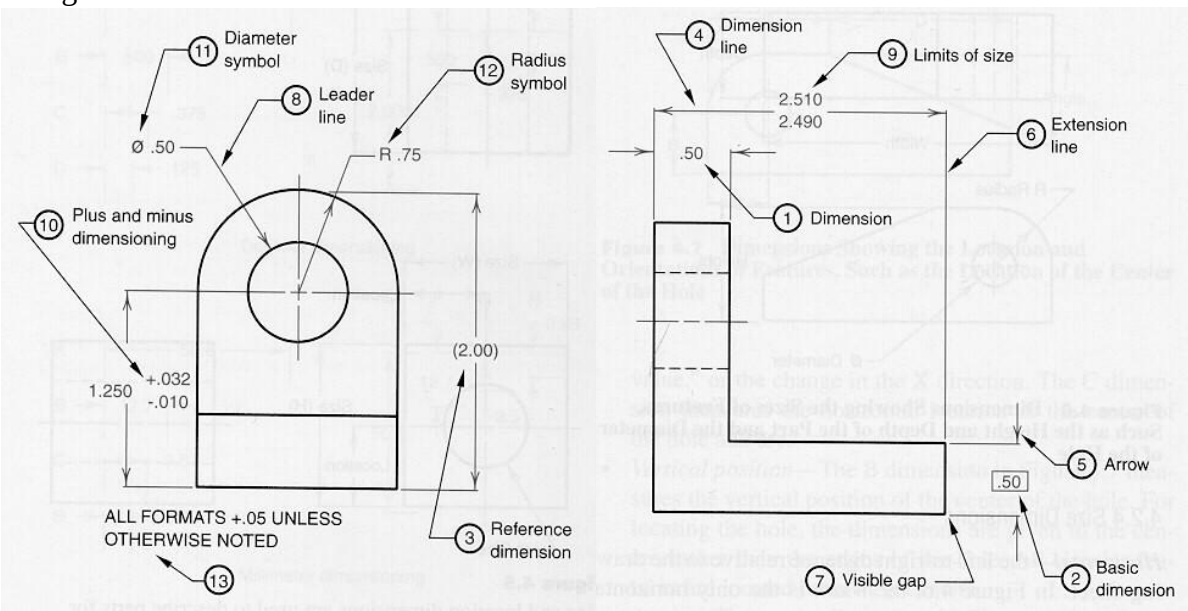

1. Dimension—the numerical value that defines the size, shape, location, surface texture, or geometric characteristic of a feature. Normally, dimension text is 3 mm and the space between lines of text is 1.5 mm (Figure 3)

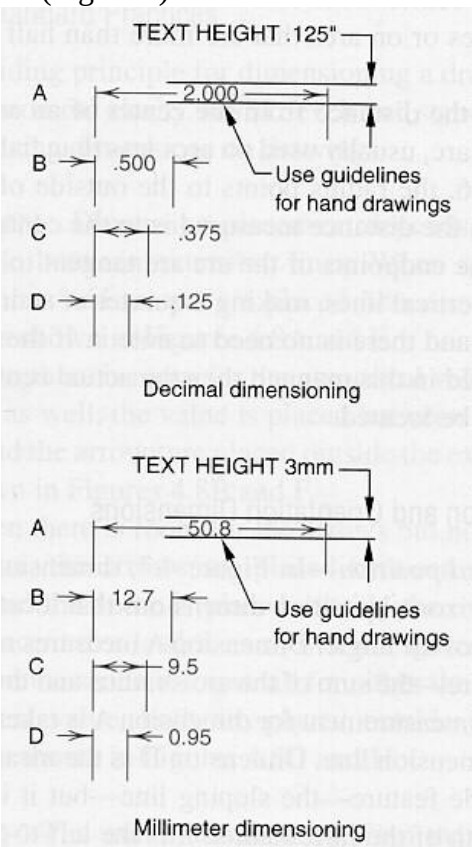

2. Basic dimension—a numerical value defining the theoretically exact size, location, profile, or orientation of a feature relative To a coordinate system established by datums. Basic

dimensions have no tolerance. They locate the perfect geometry of a part, while the acceptable variation or geometric tolerance is described in a feature control frame.

3. Reference dimension—a numerical value enclosed in parentheses, providing for information only and not directly used in the fabrication of the part. A reference dimension is a calculated size without a tolerance used to show the intended design size of a part.

4. Dimension line—a thin, solid line that shows the extent and direction of a dimension. Dimension lines are broken for insertion of the dimension numbers.

5. Arrows—symbols placed at the ends of dimension lines to show me limits of the dimension, leaders, and cutting plane lines. Arrows are uniform in size and style, regardless of the size of the drawing. Arrows are usually about 3 mm long and should be one-third as wide as they are long. (Figure 4)

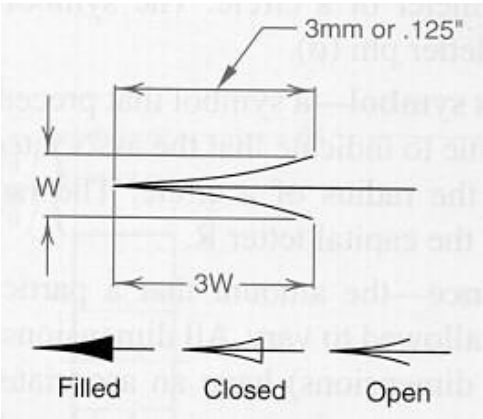

6. Extension line—a thin, solid line perpendicular to a dimension line, indicating which feature is associated with the dimension.

7. Visible gap—there should be a visible gap of 1mm between the feature's comers and the end of the extension line.

8. Leader line—a thin, solid line used to indicate the feature with which a dimension, note, or symbol is associated- Leader lines are generally a straight line drawn at an angle that is neither horizontal nor vertical, Leader lines are terminated with an arrow touching the part or detail- On the end opposite the arrow, the leader line will have a short, horizontal shoulder (3 mm long). Text is extended from this shoulder such that the text height is centered with the shoulder line. Two or more adjacent leaders on a drawing should be drawn parallel to each other.

9- Limits of size—the largest acceptable size and the minimum acceptable size of a feature. The value for the largest acceptable size, expressed as the maximum material condition (MMC), is placed over the value for the minimum acceptable size, expressed as the least material condition (LMC), to denote the limit-dimension-based tolerance for the feature.

10. Plus and minus dimension—the allowable positive and negative variance from the dimension specified. The plus and minus values may or may not be equal.

11. Diameter symbol—a symbol that precedes a numerical value, to indicate that the dimension showsthe diameter of a circle. The symbol used is the Greek letter phi (∅).

12. Radius symbol—a symbol that precedes a numerical value to indicate that the associated dimension shows the radius of a circle. The radius symbol used is the capital letter R.

13. Tolerance—the amount that a particular dimension is allowed to vary- All dimensions (except reference dimensions) have an associated tolerance. A tolerance may be expressed either through limit dimensioning, plus and minus dimensioning, or a general note. The tolerance is the difference between the maximum and minimum limits.

2.3. Basic Concepts

A size dimension might be the overall width of a part or structure, or the diameter of a drilled hole. (Figure 5) A location dimension might be the length from the edge of an object to the center of a feature. The basic criterion is, "What information is necessary to manufacture or construct the object?" For example, to drill a hole, the manufacturer would need to know the diameter of the hole, the location of the center of the hole, and the depth to which the hole is to be drilled. These three dimensions describe the hole in sufficient detail for the feature to be made using machine tools.

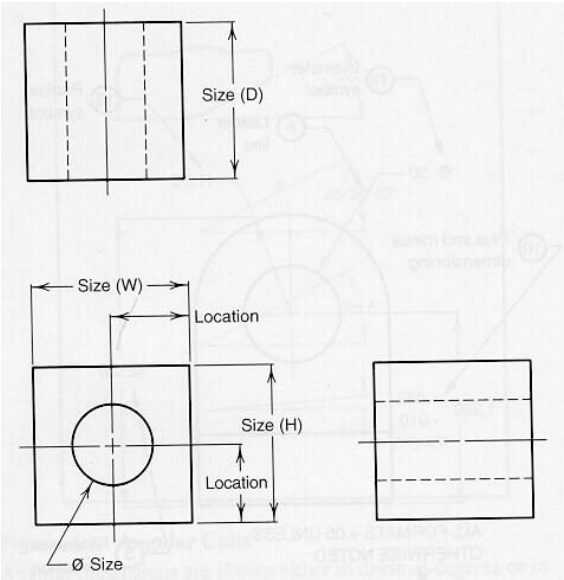

2.4. Size Dimensions

Horizontal—the left-to-right distance relative to the drawing sheet. In Figure 6, the *width* is the only horizontal size dimension.

Vertical—the up and down distance relative to the drawing sheet. In Figure 6, the *height* and the *depth* are both vertical dimensions, even though they are in two different directions on the part.

Diameter—the full distance across a circle, measured through the center. This dimension is usually used only on full circles or on arcs that are more than half of a full circle.

Radius—the distance from the center or an arc to any point on the arc, usually used on arcs less than half circles. In Figure 6, the radius points to the outside of the arc, even though the distance measured is to the center, which is inside. The endpoints of the arc are tangent to the horizontal and vertical lines, making a quarter of a circle. This is assumed, and there is no

need to note it. If the radius is not positioned in this manner, then the actual center of the radius must be located.

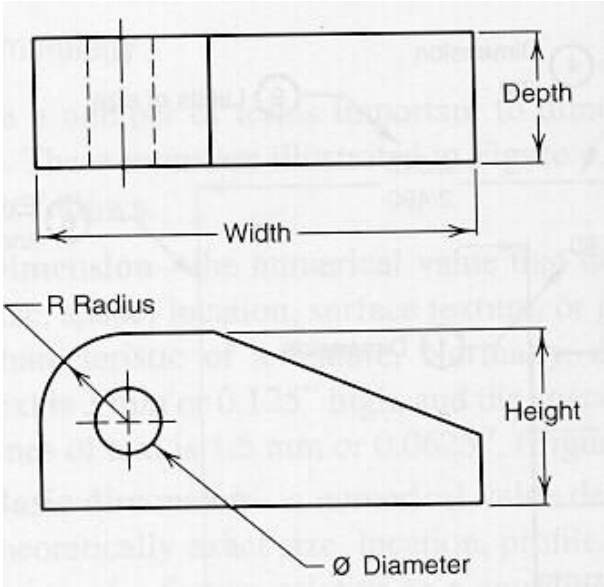

2.5. Location and Orientation Dimensions

• *Horizontal position*—In Figure 7, dimensions A and D are horizontal position dimensions that locate the beginnings of the angle. Dimension A measures more than one feature—the sum of the arc's radius and the straight line. The measurement for dimension A is taken parallel to the dimension line. Dimension D is the measurement of a single feature—the sloping line—but it is not the true length of the line. Rather, it is the left-to-right distance that the line displaces. This is called the "delta X value or the change in the X direction. The C dimension measures the horizontal location of the center of the hole and arc.

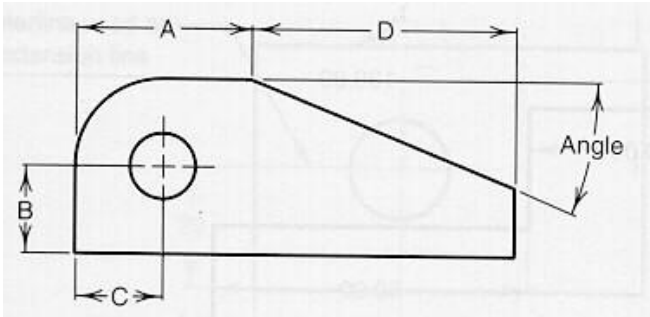

• ***Vertical position*—**The B dimension in Figure 7 measures the vertical position of the center of the hole. For locating the hole, the dimensions are given to the center, rather than the edges of the hole. All circular features are located from their centers.

• *Angle*—The angle dimension in Figure 7 gives the angle between the horizontal plane and the sloping surface. The angle dimension can be taken from several other directions, measuring from any measurable surface.

2.6 Standard Practices

The guiding principle for dimensioning a drawing is *clarity*. To promote clarity, standard practices are developed for showing dimensions on drawings.

Placement Dimension placement depends on the space available between extension lines. When space permits, dimensions and arrows are placed *between* the extension lines, as shown in Figures 8.A and E.

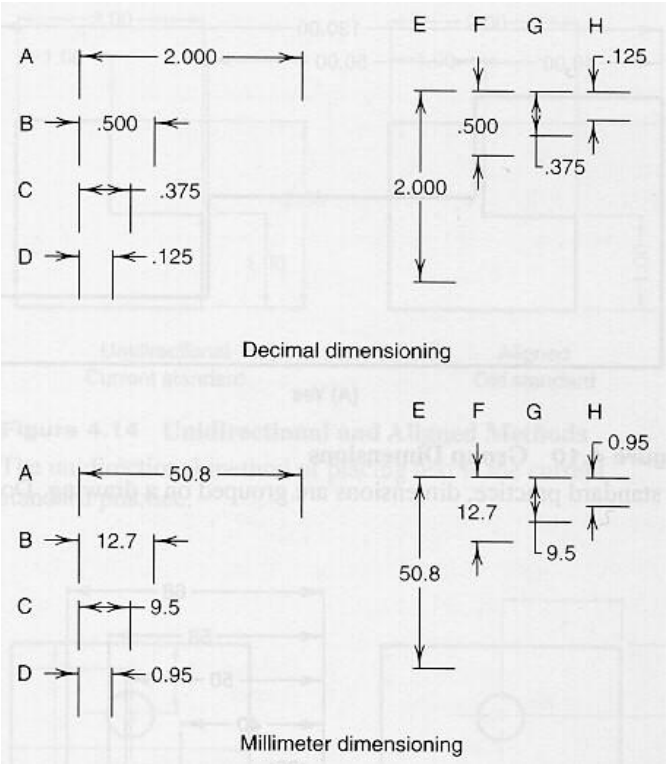

When there is room for the numerical value but not the arrows as well. the value is placed between the extension lines and the arrows are placed outside the extension lines, as shown in Figures 8.B and F.

When there is room for the arrows but not the numerical value, the arrows are placed between the extension lines, and the value is placed outside the extension lines and adjacent to a leader, as shown in Figures 8.C and G.

When the space is too small for either the arrows or the numerical value, both are placed outside the extension lines, as shown in Figures 8D and H.

Spacing The minimum distance from the object to the first dimension is 10 mm, as shown in Figure 9. The minimum spacing between dimensions is 6 mm. These values may be increased where appropriate. There should be a visible gap between an extension line and the feature to which it refers. Extension lines should extend about 2-3 mm beyond the last dimension line.

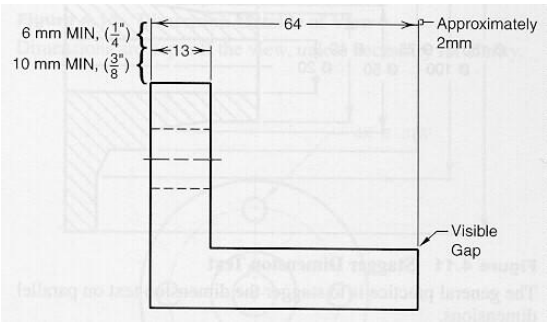

Grouping and Staggering Dimensions should be grouped for uniform appearance, as shown in Figure 10. As a general rule, do not use object lines as part of your dimension (Figure 10B). Where there are several parallel dimensions, the values should be staggered, as shown in Figure 11.

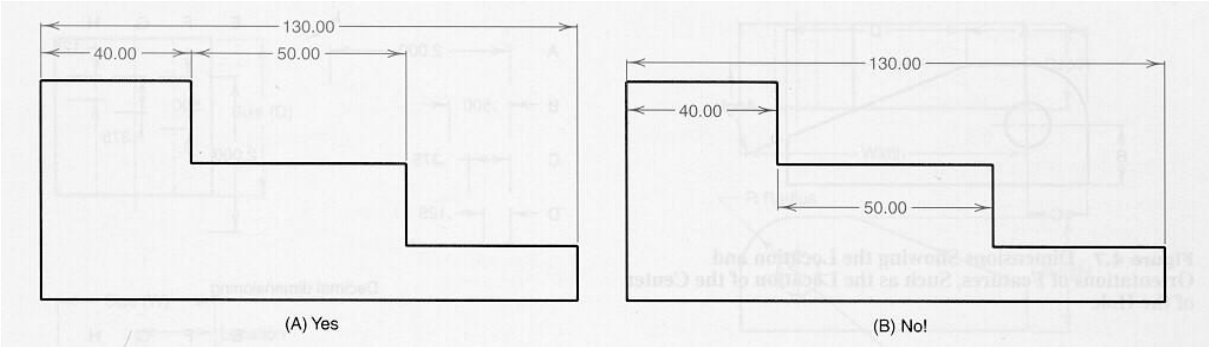

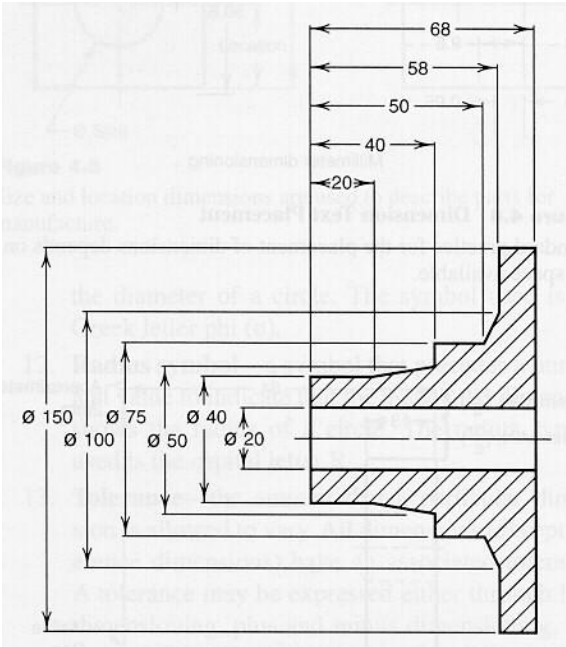

Extension Lines Extension lines are used to relate a dimension to one or more features and are usually drawn perpendicular to the associated dimension line. Where angled extension lines are used, they must he parallel, and the associated dimension lines must be drawn in the direction to which they apply.

Extension lines should not cross dimension lines, and should avoid crossing other extension lines whenever possible. When extension lines cross object lines or other extension lines, they should not be broken. When extension lines cross or are close to arrowheads, they should be broken for the arrowhead (Figure 12).

When the center of a feature is being dimensioned, the centerline of the feature is used as an extension line (Figure 13A). When a point is being located by extension lines only, the extension lines must pass through the point (Figure 13B).

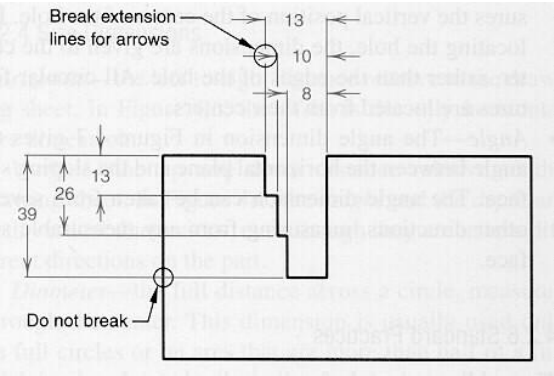

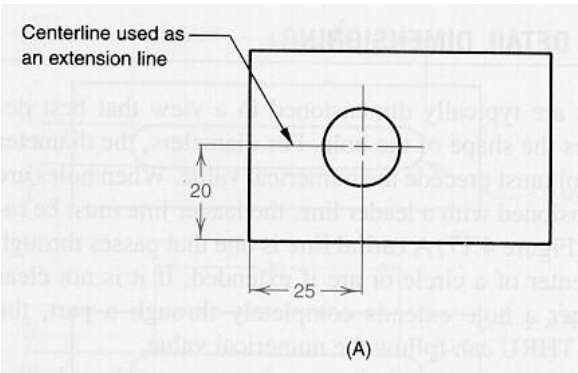

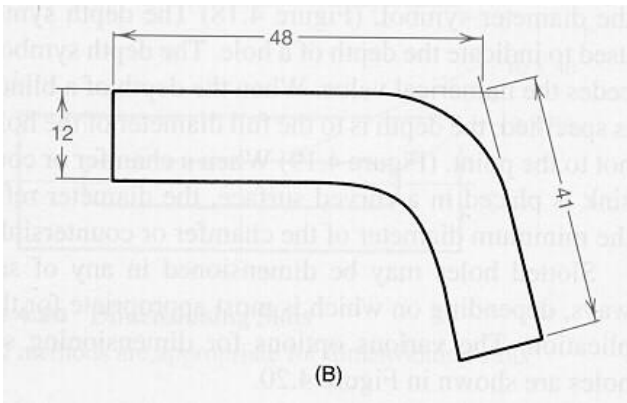

Reading Direction All dimensions and note text must be oriented to read from the bottom of the drawing (relative to the drawing format). This is called **unidirectional dimensioning** (Figure 14). The *aligned method* of dimensioning may be seen on older drawings or architectural drawings but is not approved by the current standards. **Aligned dimensions** have text placed parallel to the dimension line, with vertical dimensions read from the right of the drawing sheet.

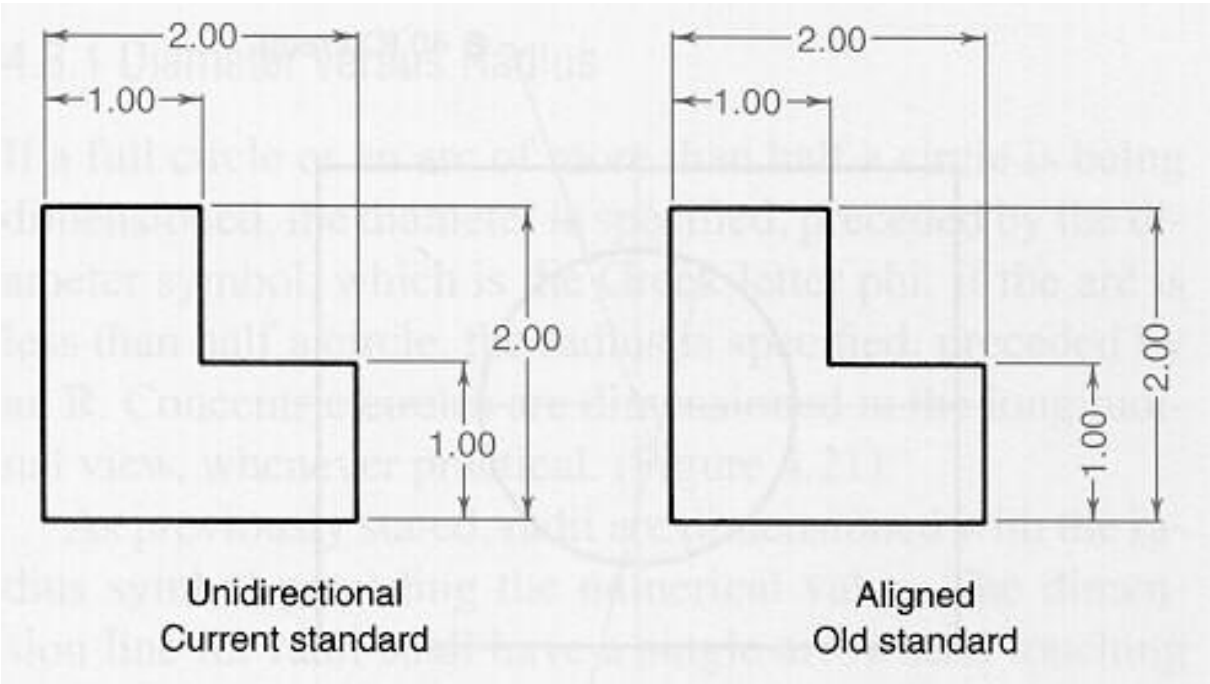

View Dimensioning Dimensions are to be kept outside the boundaries of views, wherever practical (Figure15B). Dimensions may be placed within the boundaries where extension or leader lines would be too long or where clarity would be improved.

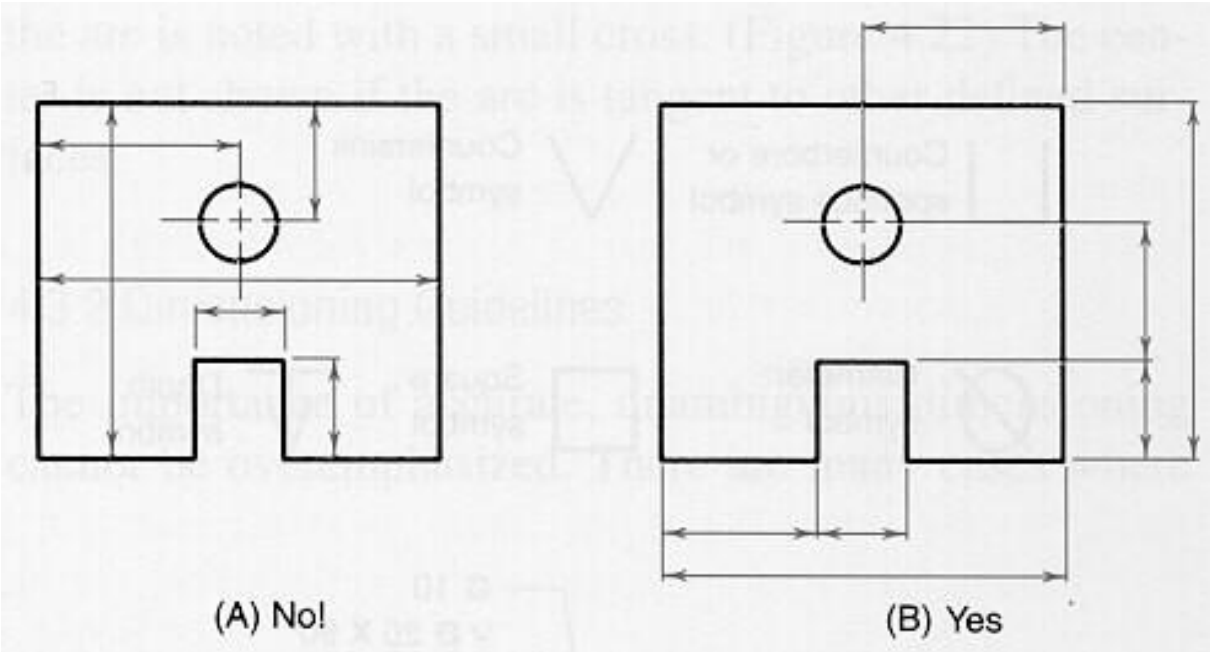

Repetitive Features The symbol X is used to indicate the number of times a feature is to be repealed. The number of repetitions, followed by the symbol X and a space, precedes the dimension text. For example, in Figure 16, 4X ∅ 0.375 means that there are 4 holes with a diameter of 0.375".

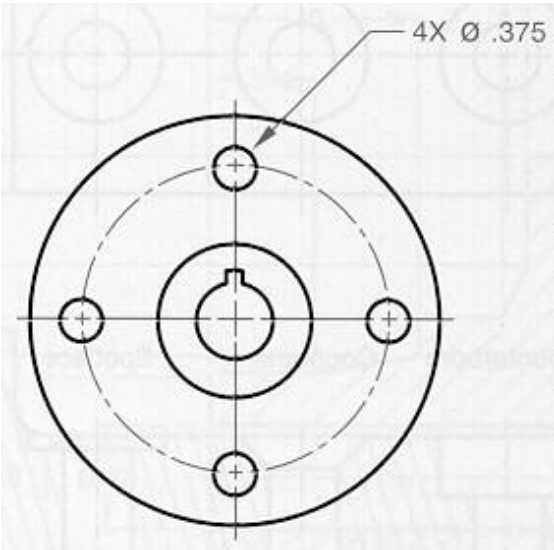

3.| DETAIL DIMENSIONING

Holes are typically dimensioned in a view dial best describes the shape of the hole. For diameters, the diameter symbol must precede the numerical value. When holes are dimensioned with a leader line, the leader line must be radial (Figure 17). A radial **line is** one that passes through the center of a circle or arc if extended. If it is not clear whether a hole extends completely through a part, the word THRU can follow the numerical value.

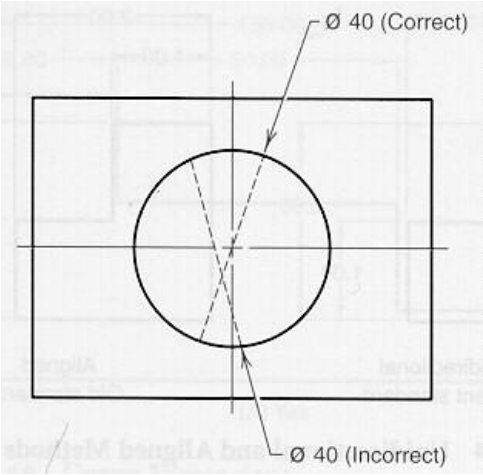

Symbols are used for spotface, counterbored, and countersunk holes. These symbols must always precede the diameter symbol (Figure 18). The depth symbol is used to indicate the depth of a hole. The depth symbol precedes the numerical value. When the depth of a blind hole is specified, the depth is to the full diameter of the hole and not to the point (Figure 19).

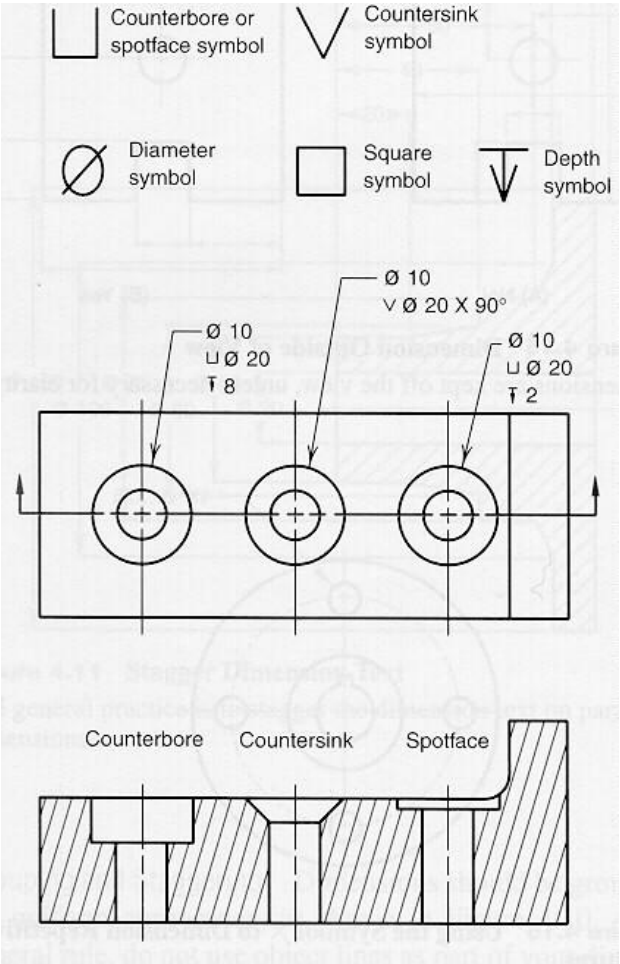

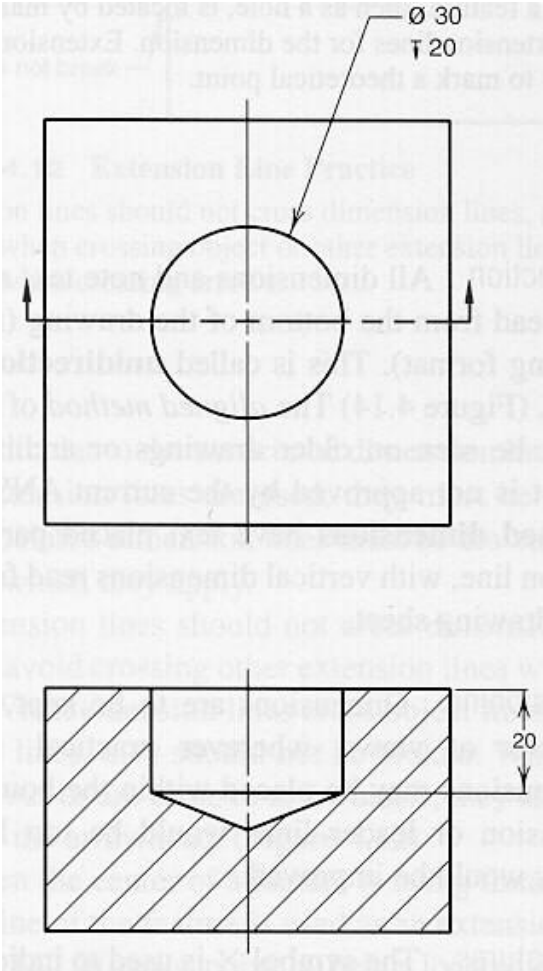

When a chamfer or countersink is placed in a curved surface, the diameter refers to the minimum diameter of the chamfer or countersink. Slotted holes may be dimensioned in any of several ways, depending on which is most appropriate for the application. The various options for dimensioning slotted holes are shown in Figure 20.

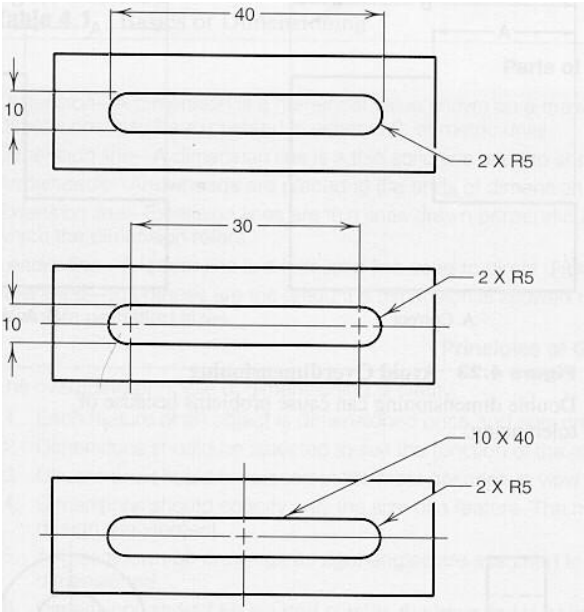

3.1. Diameter versus Radius

If a full circle or an arc of more than half a circle is being dimensioned, the diameter is specified, preceded by the diameter symbol ∅. If the arc is less than half a circle, the radius is specified, preceded by an R. Concentric circles are dimensioned in the longitudinal view, whenever practical (Figure 21).

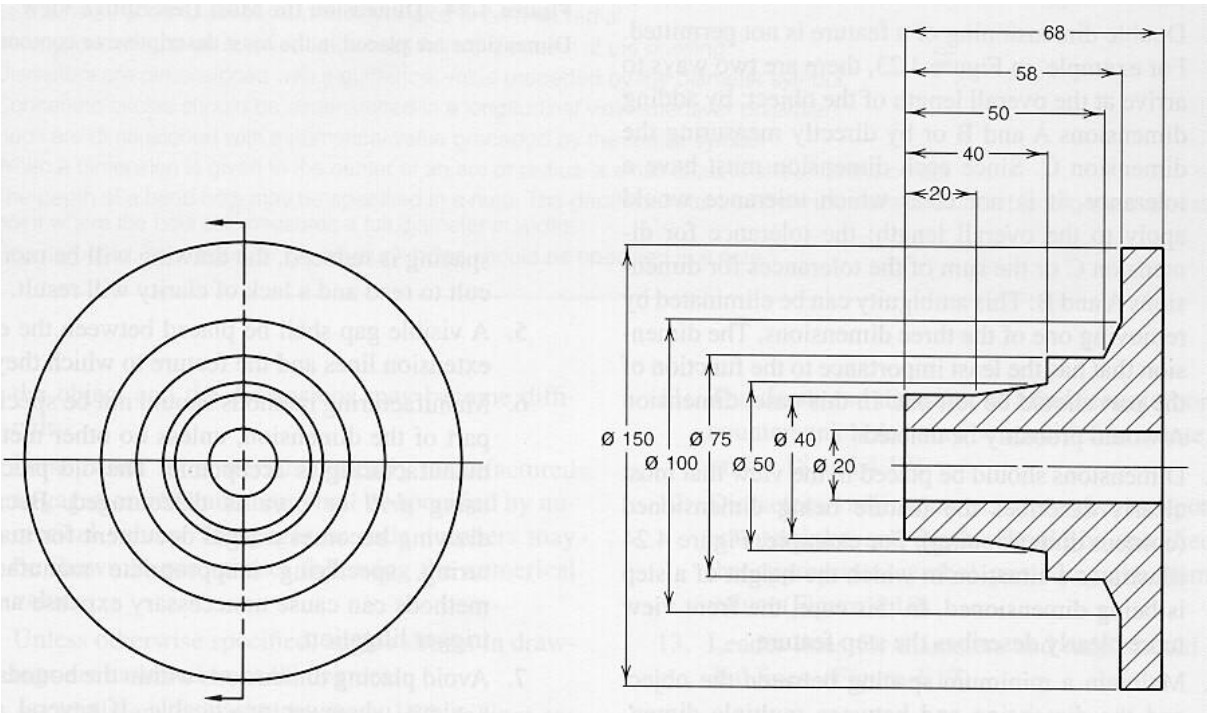

As previously stated, radii are dimensioned with the radius symbol preceding the numerical value. The dimension line for radii shall have a single arrowhead touching the arc. When there is adequate room, the dimension is placed between the center of the radius and the arrowhead, (Figure 22). When space is limited, a radial leader line is used. When an arc is not clearly defined by being tangent to other dimensioned features on the object, the center of the arc is noted with a small cross (Figure 22). The center is not shown if the *arc* is tangent to other defined surfaces.

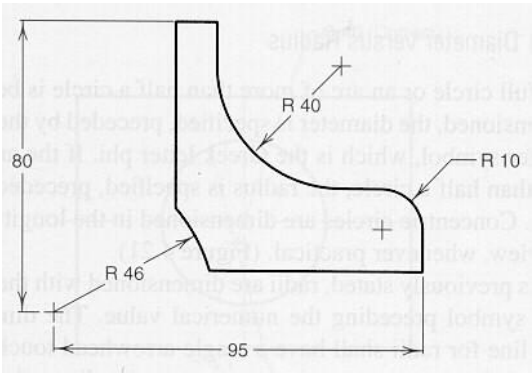

3.2. Dimensioning Guidelines'

The importance of accurate, unambiguous dimensioning cannot be overemphasized. There are many cases where an incorrect or unclear dimension has added considerable expense to the fabrication of a product, caused premature failure, or, in some cases, caused loss of life. *The primary guideline is clarity: Whenever two guidelines appear to conflict, the method that most clearly communicates the size information shall prevail.* Use the following dimensioning guidelines:

1. Every dimension must have an associated tolerance, and that tolerance must be clearly shown on the drawing.
2. Double dimensioning of a feature is not permitted. For example, in Figure 23, there arc two ways to arrive at the overall length of the object: by adding dimensions A and B or by directly measuring the dimension C. Since each dimension must have a tolerance, it is not clear which tolerance would apply to the overall length: the tolerance for dimension C or the sum of the tolerances for dimensions A and B. This ambiguity can be eliminated by removing one of the three dimensions. The dimension that has the least importance to the function of the part should be left out. In this case, dimension A would probably be deleted.

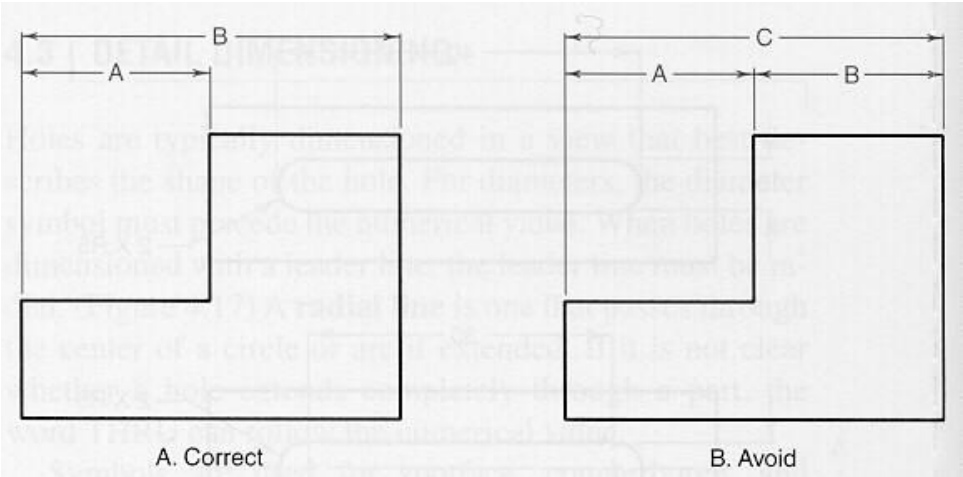

3. Dimensions should be placed in the view that most clearly describes the feature being dimensioned (contour dimensioning). For example, Figure 24 illustrates a situation in which the height of a step is being dimensioned. In this case, the front view more clearly describes the step feature.

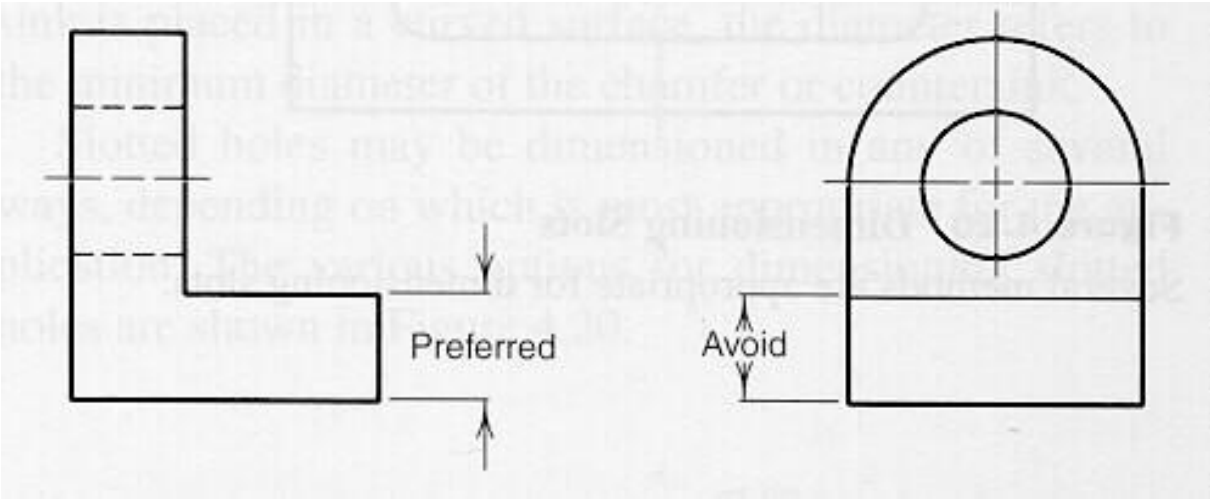

4. Maintain a minimum spacing between the object and the dimension and between multiple dimensions. This spacing is shown in Figure 9. If the spacing is reduced, the drawing will be more difficult to read and a lack of clarity will result.

5. A visible gap shall be placed between the ends of extension lines and the feature to which they refer.

6. Manufacturing methods should not be specified as part of the dimension, unless no other method of manufacturing is acceptable. The old practice of using *drill* or *bore* is discouraged. Because a drawing becomes a legal document for manufacturing, specifying inappropriate manufacturing methods can cause unnecessary expense and may trigger litigation.

7. Avoid placing dimensions within the boundaries of a view, whenever practicable. If several dimensions are placed in a view, differentiation between the object and the dimensions may become difficult.

8- Dimensions for materials typically manufactured to gages or code numbers shall be specified by numerical values. The gages or code numbers may be shown in parentheses following the numerical values.

9. Unless otherwise specified, angles shown in drawings are assumed to be 90 degrees.

10. Avoid dimensioning hidden lines. Hidden lines are less clear than visible lines.

11. The depth and diameter of blind, counterbored, or countersunk holes may be specified in a note (Figures 18 and 19).
12. Diameters, radii, squares, counterbores, spotfaces, countersinks, and depths should be .specified with the appropriate symbol preceding the numerical value (Figure 18).

13. Leader lines for diameters and radii should be radial lines (Figure 17).

Table 1 summarizes the basics of dimensioning,

Parts of a Dimension

Dimension—A dimension is a numerical value shown on a drawing to define the size of an object or a part of an object. Dimensions may be expressed in either U.S. or metric units.
Dimension line—A dimension line is a thin solid line used to show the extent and direction of a dimension.
Arrowheads—Arrowheads are placed at the ends of dimension lines to show the limits of the dimension.
Extension fine—Extension lines are thin lines drawn perpendicular to dimension lines, and they indicate the feature of the object towhich the dimension refers.
Leader line—A leader line is a thin solid line used to direct dimensions or notes to the appropriate feature.
Tolerance—Tolerances are the amount a dimension is allowed to vary. The tolerance is the difference between the maximum and minimum permitted sizes.

Principles of Good Dimensioning

The overriding, principle of dimensioning is clarity.
1. Each feature of an object is dimensioned once and only once.
2. Dimensions should be selected to suit the function of the object.
3. Dimensions should be placed in the most descriptive view of the feature being dimensioned.
4. Dimensions should specify only the size of a feature. The manufacturing method should only be specified if it is a mandatory design requirement.
5- Angles shown on drawings as right angles are assumed to be 90 degrees unless otherwise specified, and they need not be dimensioned.
6. Dimensions should be located outside the boundaries of the object whenever possible.
7. Dimension lines should be aligned and grouped where possible to promote clarity and uniform appearance,
8. Crossed dimension lines should be avoided whenever possible. When dimension lines must cross, they should be unbroken.
9. The space between the first dimension line and the object should be at least 10 mm. The space between dimension lines should be at least 6 mm.
10. There should be a visible gap between the object and the origin of an extension line.
11. Extension lines should extend 3 mm beyond the last dimension line.
12. Extension lines should be broken if they cross or are close to arrowheads.
13. Leader lines used to dimension circles or arcs should be radial.
14. Dimensions should be oriented to be read from the bottom of the drawing,
15. Diameters are dimensioned with a numerical value preceded by the diameter symbol.
16. Concentric circles should be dimensioned in a longitudinal view whenever possible.
17. Radii are dimensioned with a numerical value preceded by the radius symbol.
18. When a dimension is given to the center of an arc or radius, a small cross is shown at the center.
19. The depth of a blind hole may be specified in a note. The depth is measured from the surface of the object to the deepest point where the hole still measures a full diameter in width.
20. Counterbored, spotfaced, or countersunk holes should be specified in a note.

4.| TOLERANCING

Tolerances are used to control the variation that exists on all manufactured parts. Toleranced dimensions control the amount of variation on each part of an assembly. The amount each part is allowed to vary depends on the function of the part and of the assembly. For example, the tolerances placed on electric hand-drill parts are not as stringent as those placed on jet engine parts. The more accuracy needed in the machined part, the higher the manufacturing cost. Therefore, tolerances must be specified in such a way that a product functions as it should at a cost that is reasonable.

A tolerance of 4.650 ± 0.003 means that the final measurement of the machined part can be anywhere from 4.653 to 4.647 and the part would still be acceptable. The lower and upper allowable sizes are referred to as the *limit dimensions*, and the *tolerance* is the difference between the limits. In the example, the upper limit (largest value) for the part is 4.653, the lower limit (smallest value) is 4.647, and the tolerance is 0.006.

Tolerances are assigned to mating parts. For example, the slot in the part shown in Figure 25 must accommodate another part. A *system* is two or more mating parts.

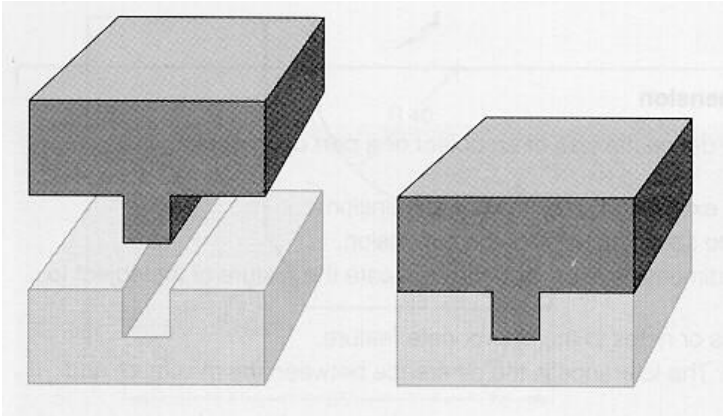

5. TOLERANCE REPRESENTATION

Tolerance is the total amount a dimension may vary and is the difference between the maximum and minimum limits, Because it is impossible to make everything to an exact size, tolerances are used on production drawings To control the manufacturing process more accurately and to control the variation between mating parts.

Tolerances can be expressed in several ways:
1. Direct limits, or as tolerance values applied directly to a dimension. (Figure 26)
2. Geometric tolerances, (Figure 27)
3. Notes referring to specific conditions,
4. A general tolerance note in the title block.

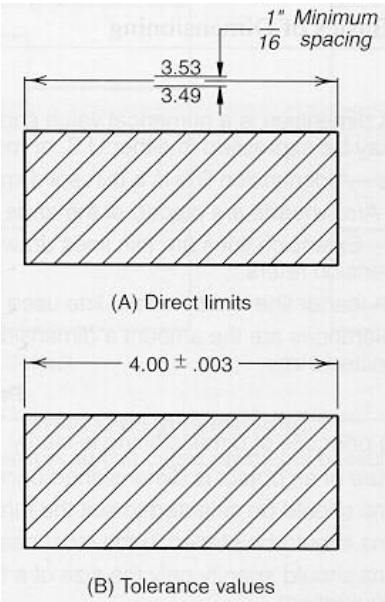

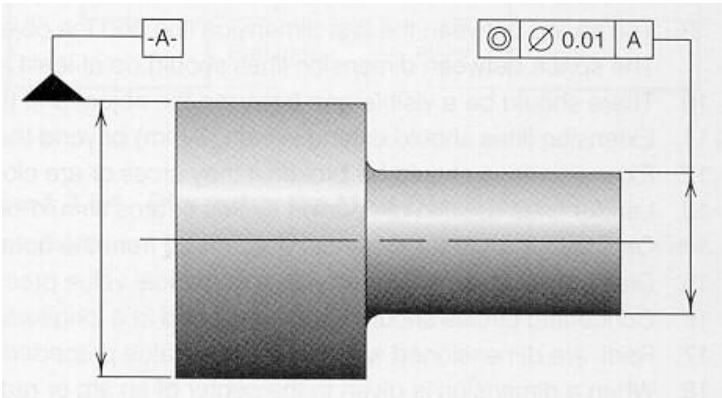

5.1 General Tolerances

General tolerances are given in a note or as part of the title block. A general tolerance note would be similar to:

ALL DECIMAL DIMENSIONS TO BE HELDTO ± .002"

This means that a dimension such as 0.500 would be as signed a tolerance of ± .002, resulting in an upper limit of 0.502 and a lower limit of 0.498.

5.2. Limit Dimensions

Tolerances can be applied directly to dimensioned features, using limit dimensioning: the maximum and minimum sizes are specified as part of the dimension (Figure 26.A). Either the upper limit is placed above the lower limit, or, when the dimension is written in a single line, the lower limit precedes the upper limit, and they are separated by a dash. A minimum spacing of 1.5 mm is required when the upper limit is placed above the lower limit.

5.3. Plus and Minus Dimensions

With this approach, the basic size is given, followed by a plus/minus sign and the tolerance value (Figure 28). Tolerances can be unilateral or bilateral. A unilateral tolerance varies in only one direction. A bilateral tolerance varies in both directions from the basic size- If the variation is equal in both directions, then the variation is preceded by a ± symbol. *The plus and minus approach can only be used when the two variations are equal.*

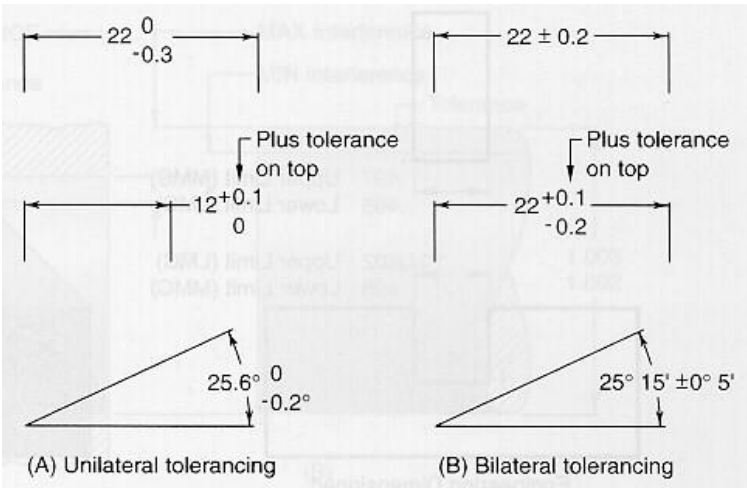

5.4 Single Limit Dimensions

When other elements of a feature will determine one limit dimension, MIN or MAX is placed after the other limit dimension. Items such as depth of holes, length of threads, corner radii, and chamfers can use the single limit dimension technique.

5.5. Important Terms

Figure 29 shows a system of two parts with toleranced dimensions.

- **Nominal size**—a dimension used to describe the general size, usually expressed in common fractions. The slot in Figure 29 has a nominal size of 0.500".
- **Basic size—**the theoretical size used as a starling point for the application of tolerances. The basic size of the slot in Figure 29is 0.500".
- **Actual** size—the measured size of the finished part after machining. In Figure 29, the actual size is 0.501".
- **Limits**—The maximum and minimum sizes shown by the toleranced dimension. The slot in Figure 29 has limits of 0.502 and 0.498, and the mating part has limits of 0.495 and 0.497. The larger value for each part is the *upper limit*, and the smaller value is the *lower limit.*
- Allowance—the minimum clearance or maximum Interference between parts, or the *tightest* fit between two mating parts. In Figure 29, the allowance is 0.001, meaning that the tightest fit occurs when the slot is machined to its smallest allowable size of 0.498 and the mating part is machined to its largest allowable size of 0.497. The difference between 0.498 and 0.497, or 0.001, is the allowance.

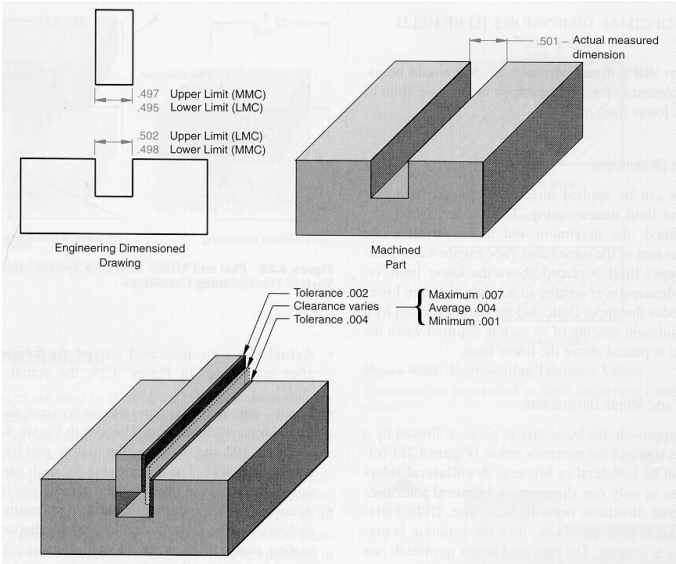

- **Tolerance—**the total allowable variance in a dimension: the difference between the upper and lower limits. The tolerance of the slot in Figure 29 is 0.004" (0.502-0.498=0.004) and the tolerance of the mating part is 0.002" (0.497-0.495 = 0.002).
- **Maximum material condition (MMC)**—the condition of a part when it contains the greatest amount of material. The MMC of an external feature, such as a shaft, is the upper limit. The MMC of an internal feature, such as a hole, is the lower limit.
- **Least material condition (LMC)**—the condition of a part when it contains the least amount of material possible. The LMC of an external feature is the lower limit. The LMC of an internal feature is the upper limit.
- **Piece tolerance**—the difference between the upper and lower limits of a single part.
- **System tolerance**—the sum of all the piece tolerances.

5.6. Fit Types

The degree of tightness between mating parts is called the *fit.* The basic hole and shaft system shown in Figures 30 and 31 is an example of the three most common types of fit found in industry.

Clearance fit occurs when two toleranced mating parts will always leave a space or clearance when assembled. In Figure 30, the largest that shaft A can be manufactured is 0.999, and the smallest the hole can be is 1.000. The shaft will always be smaller than the hole, resulting in a minimum clearance of +0.001, also called an *allowance.* The maximum clearance occurs when the smallest shaft (0.998) is mated with the largest hole (1.001), resulting in a difference of +0.003.

Interference fit occurs when two toleranced mating parts will always interfere when assembled. An interference *fit fixes* or *anchors* one part into the other, as though the two parts were one. In Figure 30, the smallest that shaft B can be manufactured is 1.002, and the largest the hole can be manufactured is 1.001. This means that the shaft will always be larger than the hole, and the minimum interference is -0.001. The maximum interference would occur when the smallest hole (1.000) i**s** mated with the largest shaft (1.003), resulting in an interference of -0.003. To assemble the parts under this condition, it would be necessary to *stretch* the hole or *shrink* the shaft or to use force to press the shaft into the hole. Having an interference is a

desirable situation for some design applications. For example, it can be used *to* fasten two parts together without the use of mechanical fasteners or adhesive.

Transition fit occurs when two toleranced mating parts are sometimes an interference fit and sometimes a clearance fit when assembled. In Figure 31, the smallest the shaft can be manufactured is 0..998, and the largest the hole can be manufactured is 1.001, resulting in a clearance of +0.003. The largest the shaft can be manufactured is 1.002, and the smallest the hole can be is 1.000, resulting in an interference of -0.002.